LD-NH R

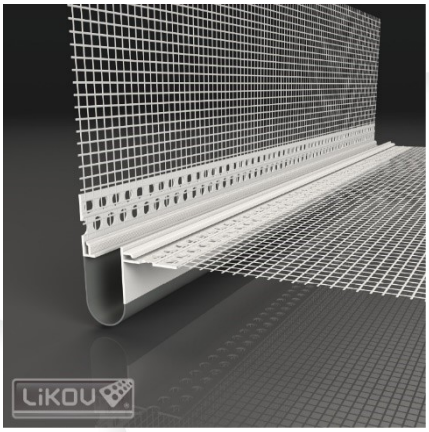

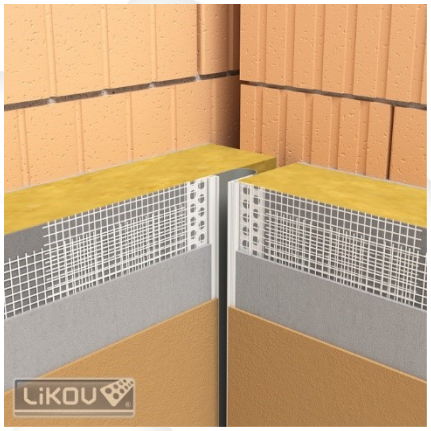

corner expansion bead with glass fibre mesh for corner connections of surfaces with visible expansion joint in thermal insulating system – ETICS/EWI

Material:

- PVC resistant to alkali environment
- Glass fibre mesh complying with ETAG 004

Features:

- Hidden edges for plaster finishing
- Co-extruded PVC soft strip – no use of glue in production of the bead
- Soft strip overlap for watertight joining of individual beads
- Pegs for secure connection of individual beads
- Durable joining of moving surfaces without the risk of cracks
- Prevention of humidity penetration under the insulation layer
- Aesthetically pleasant result

Instruction for use:

The recommended joint width is 15 – 20 mm, unless specified otherwise. Apply the base coat mortar onto the insulation layer (onto the front surface only). Place the bead to the expansion joint, press into the mortar and level with spirit level. Use pegs for connection of the beads. The soft strip overlap must point down and be positioned in the front to prevent water from penetrating the joint. To achieve accurate expansion joint width along the bead length, insert pre-cut strips of polystyrene into the gap between the bead wings. Level the excess mortar with a trowel. The polystyrene strips can be removed after the mortar curing.
The position of the expansion joints is to be specified by and authorized engineer.

Conditions of use:

It is forbidden to install the beads at air temperature and surface temperature below + 5 °C and above + 30 °C. It is necessary to protect the bead from direct sunlight and direct weather effects during the whole process until the plasters have dried.

Packaging, storage and transport:

Packed in paper boxes. Store in a dry roofed place. Transport and store in horizontal position.

Certifications and marks:

The product is not subject to any harmonized standard.

Technical data:

Bead length (L) [mm]	2500 other dimensions on request
Mesh width (E) [mm]	100
Soft strip width [mm]	50
Soft strip overlap [mm]	50
Moving range [mm]	± 10
Other bead dimensions [mm]	see scheme
Mesh fixation method	Welding by plastic rod (inert to temperatures or alkali attack)

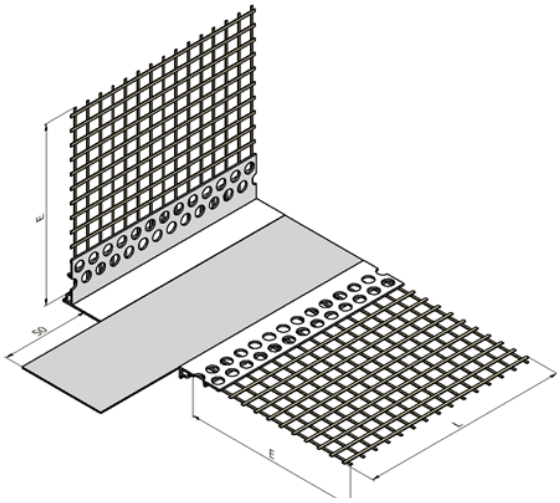

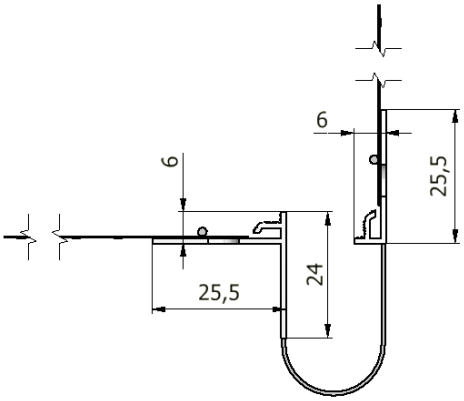

Issued on 28 May 2020.
This update invalidates all previous versions of this technical data sheet. The specified product dimensions are nominal and may range within the permitted manufacturing tolerances.

LIKOV s.r.o.
Blanenská 1859, Kuřim 664 34, Czech Republic
E-mail:trade@likov.com